ENERGY ELEMENT
WER3000LLA01-27-A

	▶ Technical Data
Order no.	**WER3000LLA01-27-A**
Series	WER3000
Transmission mode	electrical
Function	Ultrasonic welding
Compatible with installation size	WPR5100 / WPR5125 / WPR5160 / WPR5200 / WWR1160 / WWR1200
Compatible with	Loose part
No. of contacts	1
Connection type	Plug-in Connector
Nominal current [A]	6
Supply voltage [V]	2000*
Fixing thread	-
Connection type	Male
Connection type	BNC High Voltage
Connection alignment	radial
Joining force [N]	18
Release force [N]	18
Protection to IEC 60529	-
Weight [kg]	0.22
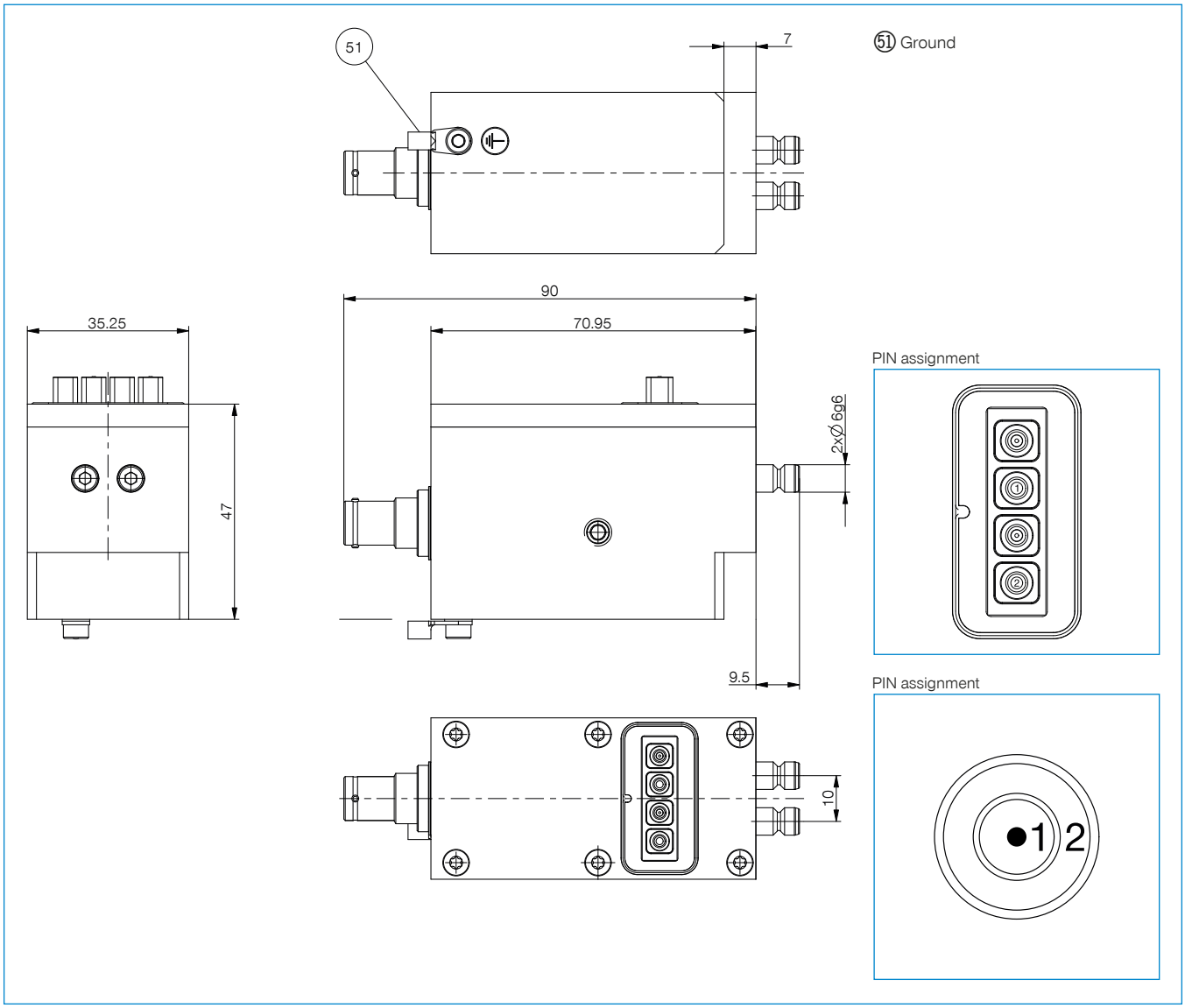
*for pollution degree 2